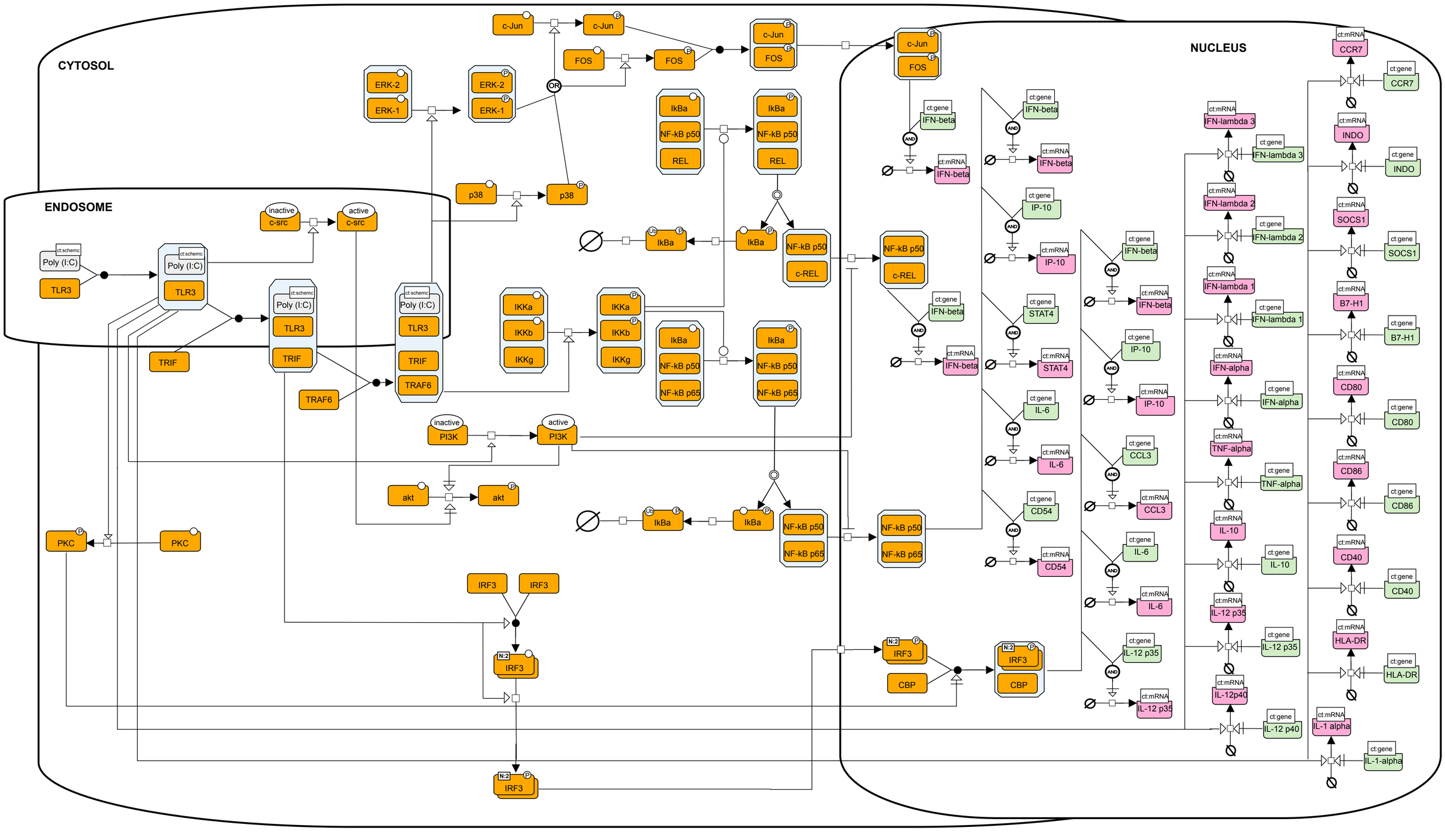
CYTOSOL
NUCLEUS
ENDOSOME
c-Jun
FOS
ERK-2
ERK-1
OR
IkBa
NF-kB p50
REL
p38
c-src
inactive
active
Poly (I:C)
TLR3
TRIF
TRAF6
IKKa
IKKb
IKKg
NF-kB p65
PI3K
akt
PKC
IRF3
CBP
c-REL
CCR7
INDO
SOCS1
B7-H1
CD80
CD86
CD40
HLA-DR
IL-1 alpha
IL-1-alpha
IFN-beta
IP-10
STAT4
IL-6
CD54
CCL3
IFN-lambda 3
IFN-lambda 2
IFN-lambda 1
IFN-alpha
TNF-alpha
IL-12 p35
IL-12p40
IL-12 p40
ct:gene
ct:mRNA
ct:schemc
AND